MODEL: 3LEN4242

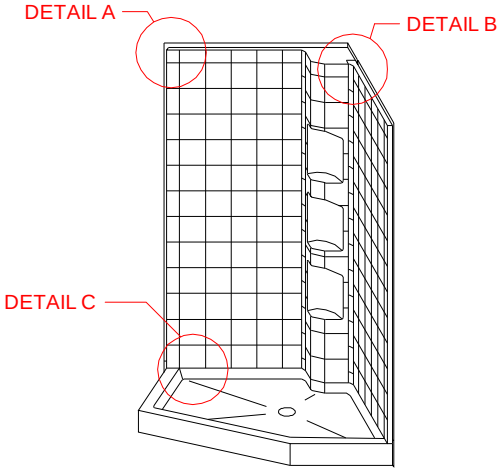

PERSPECTIVE VIEW - N.T.S.

ALL ACCESSORIES OPTIONAL

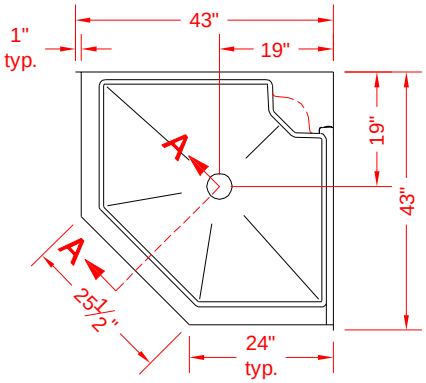

TOP VIEW - SCALE $\frac{3}{8}$" = 1'-0"

Remodeler

SEE OVER

Features:

-Three-piece gelcoat/fiberglass shower module
-The authentic look of ceramic tile without the grout
-Easy in-place assembly from the front

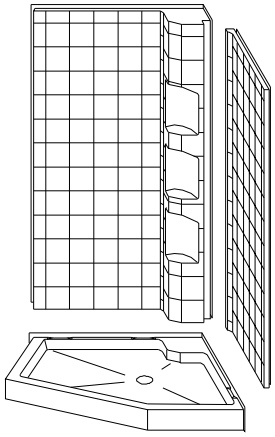

ASSEMBLY VIEW - N.T.S.

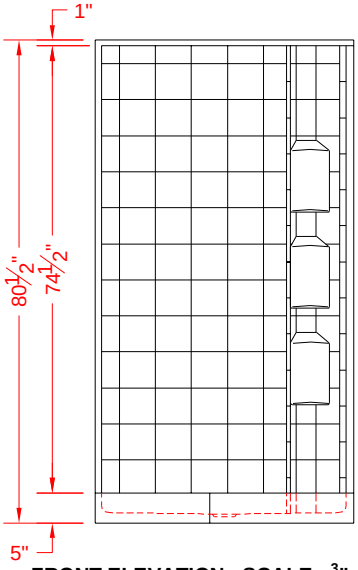

FRONT ELEVATION - SCALE: $\frac{3}{8}$" = 1'-0"

*** - SEE BACK FOR DETAIL SECTIONS**

PRODUCT SPECIFICATIONS:

-Multi piece shower module shall be constructed of gelcoat/fiberglass with full integral plywood backing in the walls
-Rough-In: Stud opening +1/4" -0" Nominal Dimensions.
-Door dimensions 22" x 24-1/4" x 22" Call factory for height
C.S.I. FORMAT SPECIFICATION TEXT AVAILABLE

PRODUCT INFORMATION:

-Accessories: Factory installed, unless prone to damage during installation/shipping. Polished chrome/satin stainless standard, others available.
-Colors: White as standard, others to match any major fixture manufacturer, also available with sprayable solid surface in many colors

ACCESSORIES:

INSTALLED BY OTHERS:
-Grab bar
-Seat, folding
-Mixing valve, pressure balanced, lever handle, preplumbed tree to supply elbow
-Curtain and rod

CODES:

Designed and manufactured in compliance with the following standards and codes:
-A.N.S.I. Z1241.2 Standards for plastic Bathtubs and Showers
-I.P.C. International Plumbing Code
-U.P.C. Uniform Plumbing Code

NOTICE OF LIMITATION:

ORCA HealthCare
www.orcahealthcare.com
Tel: 1-855-566-6722

bestbath Intelligent Designs
We reserve the right to make revisions without notice in the design of fixtures or in packaging unless this right has specifically been waived at the time the order is accepted.

Remodeler

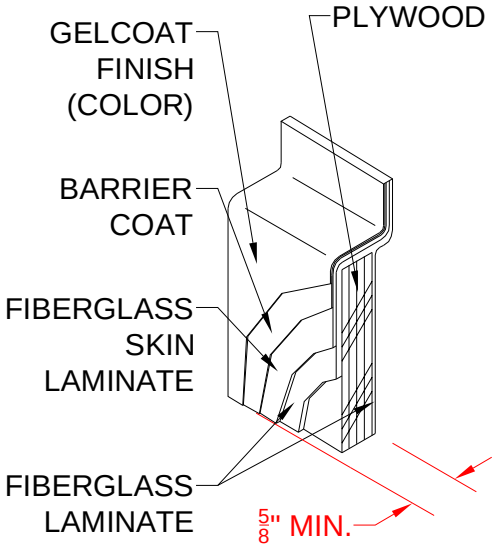

DETAIL A - SCALE N.T.S.
WALL SECTION DETAIL

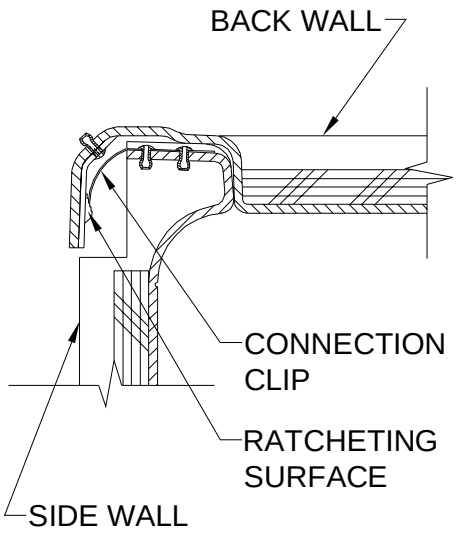

DETAIL B - SCALE N.T.S.
WALL JOINT DETAIL

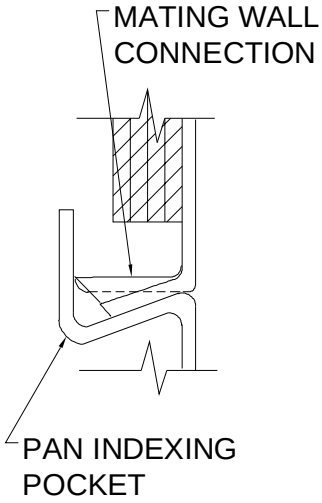

DETAIL C - SCALE N.T.S.
WALL / PAN JOINT DETAIL

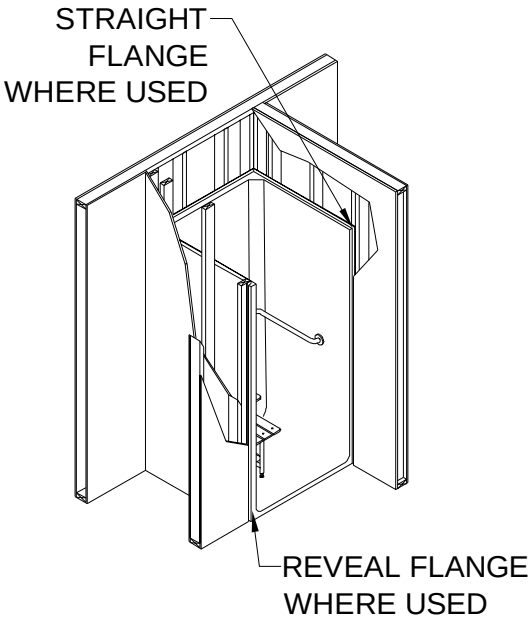

DETAIL D - SCALE N.T.S.
TYPICAL FRAMING DETAIL